Integrated Device Technology

Tutorial:
Quartz Crystal Oscillators & Phase-Locked Loops

Greg Armstrong (IDT)
Dominik Schneuwly (Oscilloquartz)

June 13th, 2016

© Copyright 2016, IDT Inc.

Content

- 1. Quartz Crystal Oscillator (XO) Technology
  - Quartz Crystal Overview
  - Ageing and Temperature
  - XO, TCXO, OCXO, DOCXO
- 2. Phase Locked Loops (PLL)
  - PLL Overview
  - Response To Injected Noise
- 3. PLL with 2 inputs

© Copyright 2016, IDT Inc.

1. Quartz Crystal Oscillator (XO) Technology

© Copyright 2016, IDT Inc.

Quartz Crystal

Quartz = SiO_2

Pink = silicon atoms

Blue = oxygen atoms

Piezo-electric effect:

- Mechanical strain ⇒ voltage

Inverse Piezo-electric effect:

- Voltage ⇒ mechanical deformation

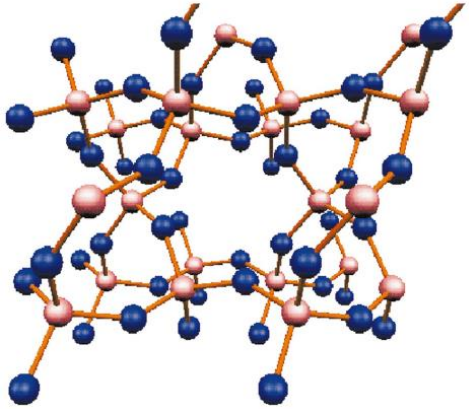

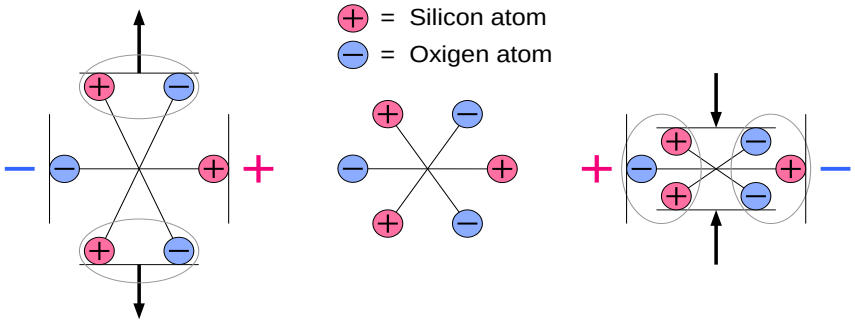

© Copyright 2016, IDT Inc.

Vibration Modes, Resonance Frequency, High Q, Cutting Orientation

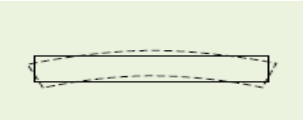

Flexure Mode

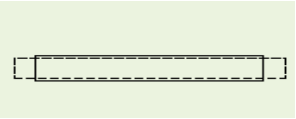

Extensional Mode

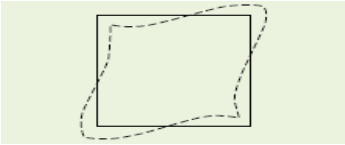

Face Shear Mode

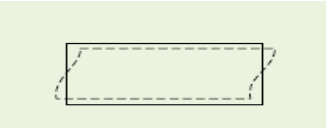

Thickness Shear Mode

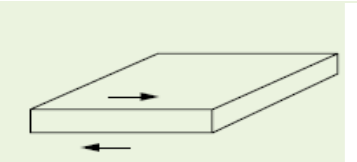

Fundamental Mode Thickness Shear

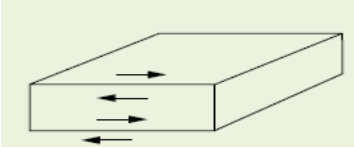

Third Overtone Thickness Shear

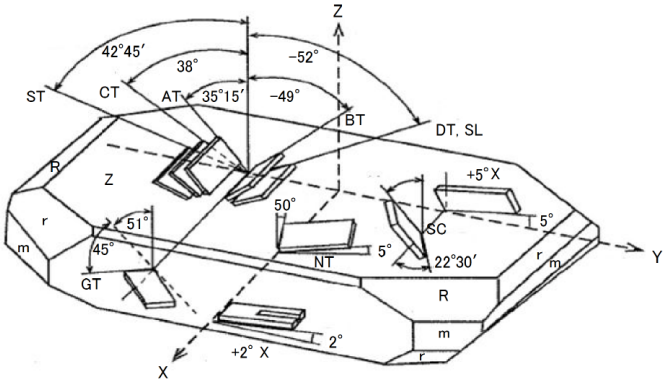

© Copyright 2016, IDT Inc.

Frequency Drift Due to Ageing

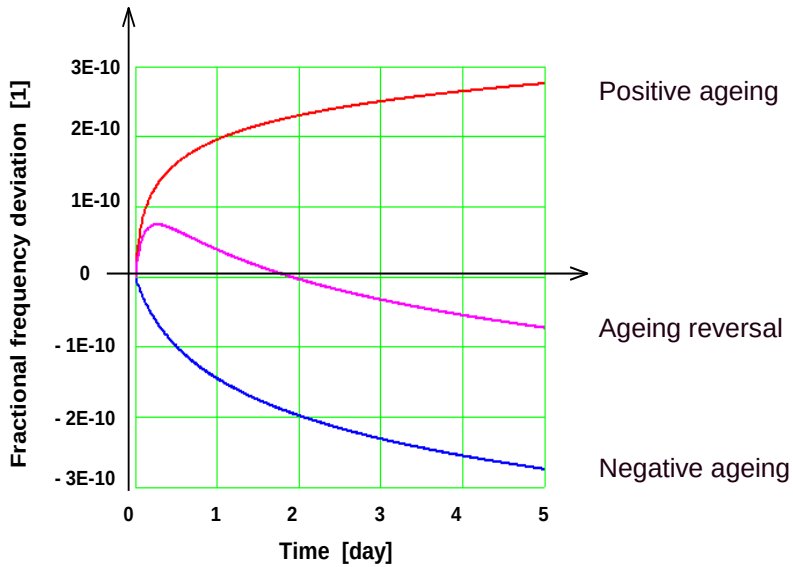

Frequency vs. Temperature

SC-cut:

Θ = 34°

Φ = 22°

Δf/f as a function of temperature

(parameter: ΔΘ = deviation from reference angle)

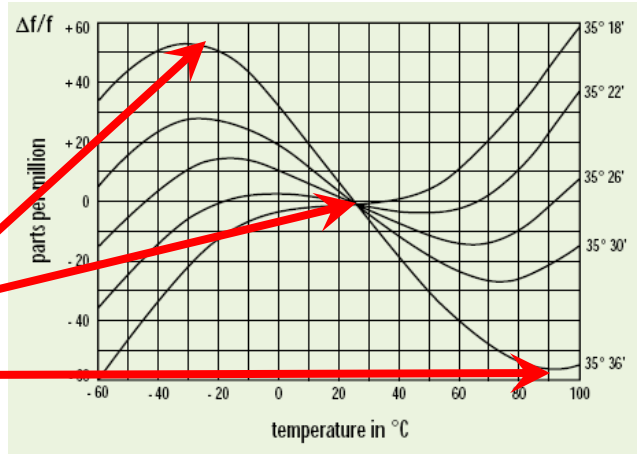

© Copyright 2016, IDT Inc.

XO Categories rel. Temp. Control

- XO, Crystal Oscillator:
  - LTP centered in the operation temperature range
  - > 1E-7 / °C

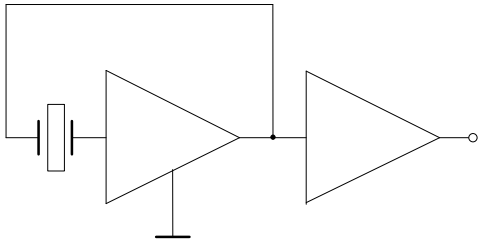

- TCXO, Temperature Compensated XO:
  - Resonance frequency is modified by a varactor diode so as to compensate temperature sensitivity
  - 5E-8 to 5E-7 over [-55°C to 85°C]

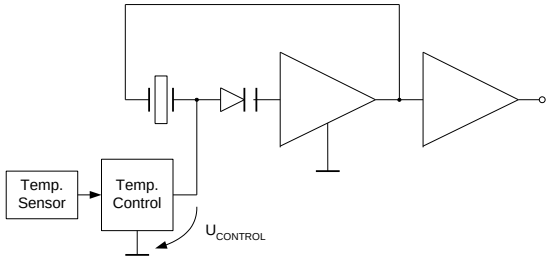

© Copyright 2016, IDT Inc.

XO Categories rel. Temp. Control

- OCXO, Oven Controlled XO:
  - A control loop maintains the oven containing the XO at (nearly) constant temperature.
  - 5E-9 to 5E-8 over [-30°C to 60°C]

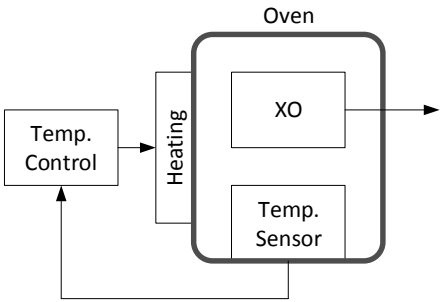

- DOCXO, Double Oven Controlled XO:
  - Two temperature controlled ovens, one inside the other.
  - 5E-11 to 5E-9 over [-30°C to 60°C]

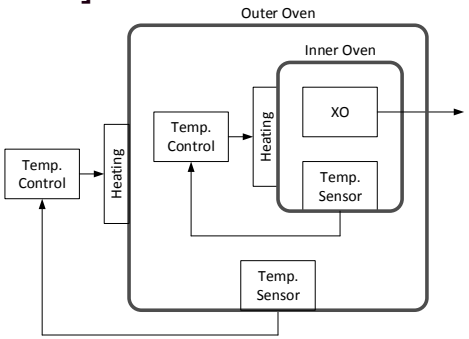

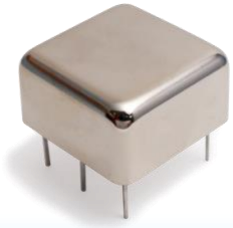

© Copyright 2016, IDT Inc.

Summary

Oscillator type	Temperature sensitivity (fractional frequency vs temperature)
XO	1E-7 / °C
TCXO	5E-8 to 5E-7 [-55°C to 85°C]
OCXO	5E-9 to 5E-8 [-30°C to 60°C]
DOCXO	5E-11 to 5E-9 [-30°C to 60°C]

© Copyright 2016, IDT Inc.

2. Phase-Locked Loops (PLL)

© Copyright 2016, IDT Inc.

PLL: Working principle

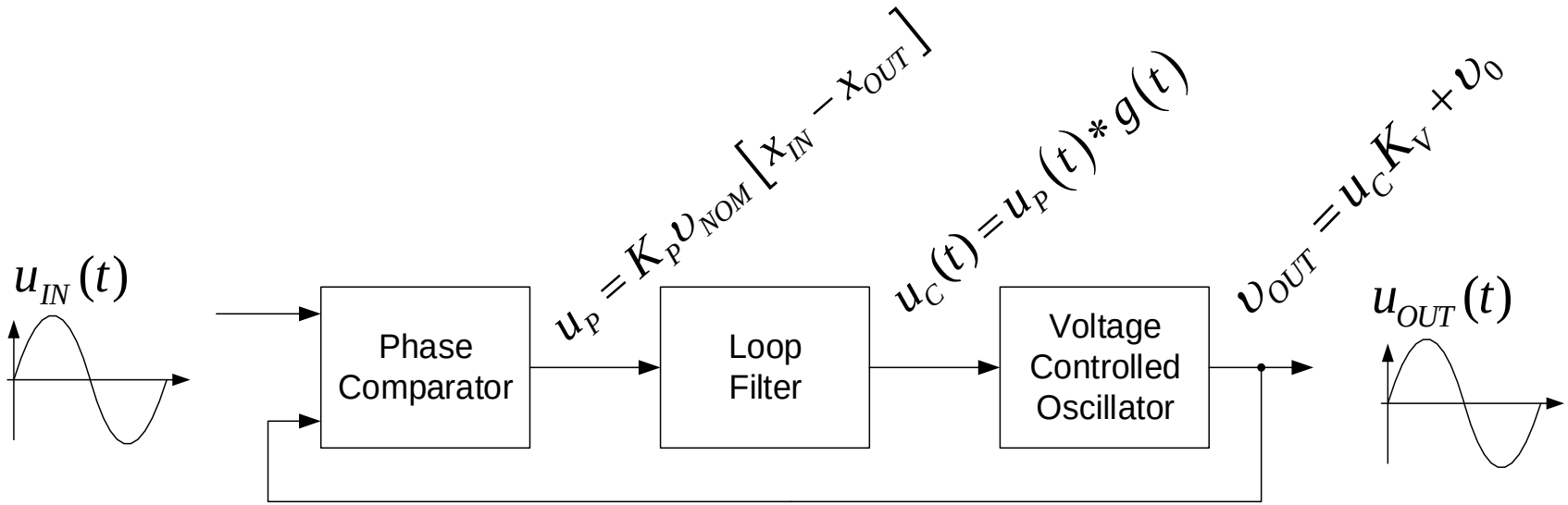

$$u_{IN}(t) = A \cdot \sin\left\{2\pi\upsilon_{NOM}\left[t + x_{IN}(t)\right]\right\} = A \cdot \sin\left\{2\pi\upsilon_{IN}(t) + \varphi_{0,IN}\right\}$$

$$u_{OUT}(t) = A \cdot \sin\left\{2\pi\upsilon_{NOM}\left[t + x_{OUT}(t)\right]\right\} = A \cdot \sin\left\{2\pi\upsilon_{OUT}(t) + \varphi_{0,OUT}\right\}$$

© Copyright 2016, IDT Inc.

PLL with Direct Digital Synthesis

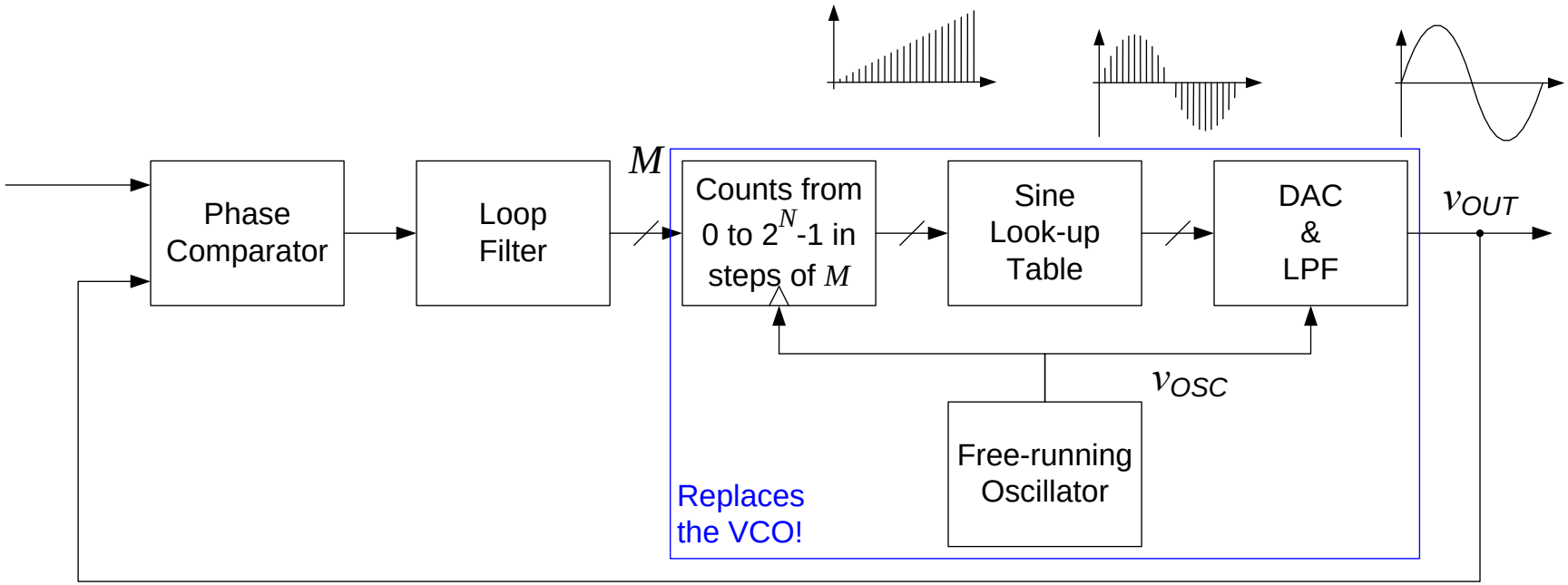

DAC = Digital-to-Analog Converter

LPF = Low-pass Filter

$$\upsilon_{OUT} = \frac{M}{2^N}\upsilon_{OSC}$$

where $M =$ output of the digital loop filter (integer)

$N =$ size of the counter in bits (integer)

$\upsilon_{OUT} =$ frequency of output signal $u_{OUT}(t)$

$\upsilon_{OSC} =$ free-run frequency of the oscillator

© Copyright 2016, IDT Inc.

PLL with Digitally Controlled Oscillator

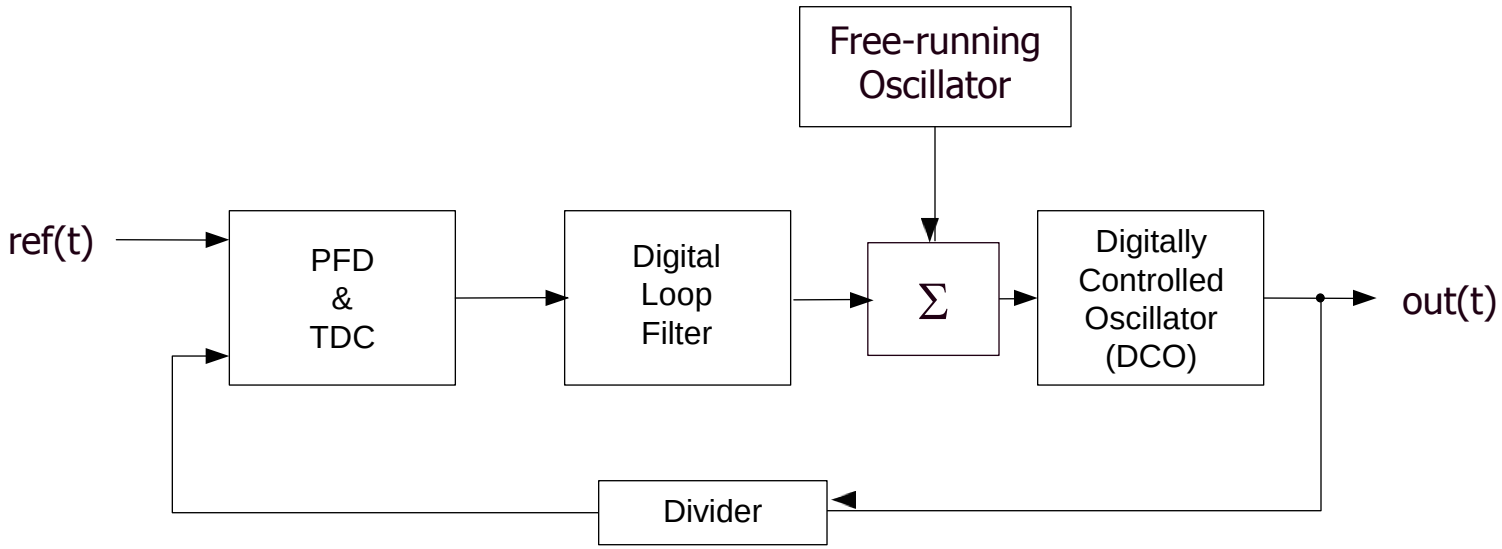

PFD – Phase & Frequency Detector

TDC – Time-to-Digital Converter

© Copyright 2016, IDT Inc.

PLL with VCO, DDS, and DCO compared

	Pros	Cons
PLL with VCO	•Very low phase noise	•PLL's pull-in range depends on VCO's pulling range •Requires VCO
PLL with DDS	•Configurable pull-in range •Requires only free-running oscillator	•Some quantization phase noise

PLL with DCO	•Fully programmable
	  •Configurable pull-in range
	  •Configurable low pass filter range
	•Requires only free-running oscillator
		•Requires APLL to clean up jitter
		•Precision of TDC affects close-in phase noise

© Copyright 2016, IDT Inc.

PLL Response to Injected Noise

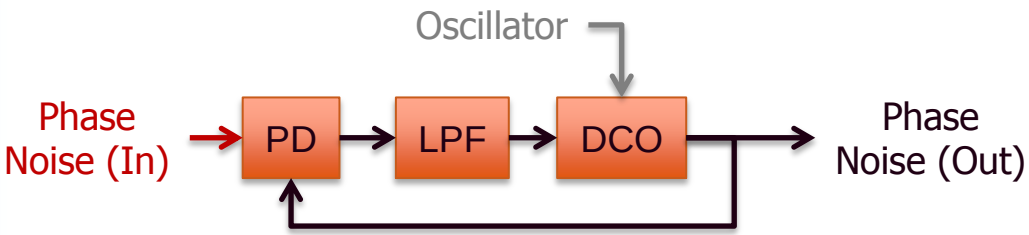

Transfer function «Input-to-Output»

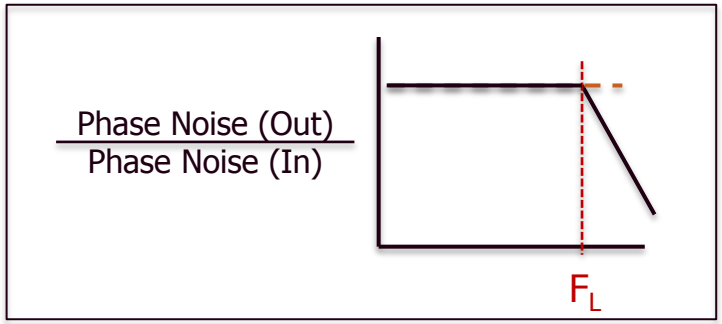

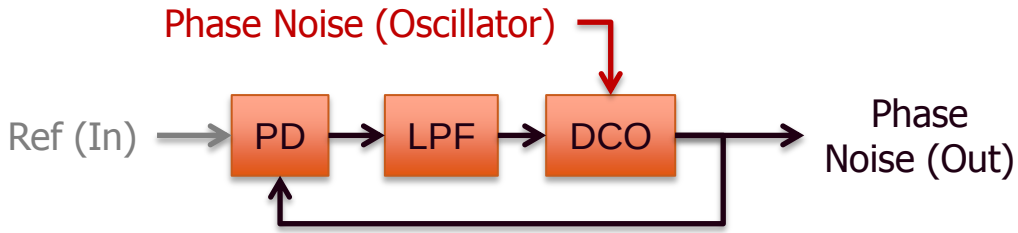

Transfer function «Oscillator-to-Output»

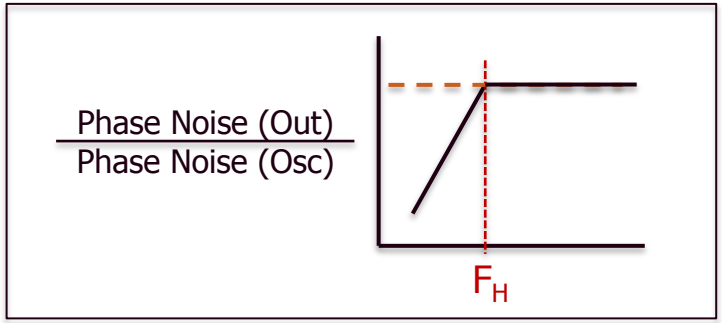

© Copyright 2016, IDT Inc.

PLL: Jitter & Wander filtering

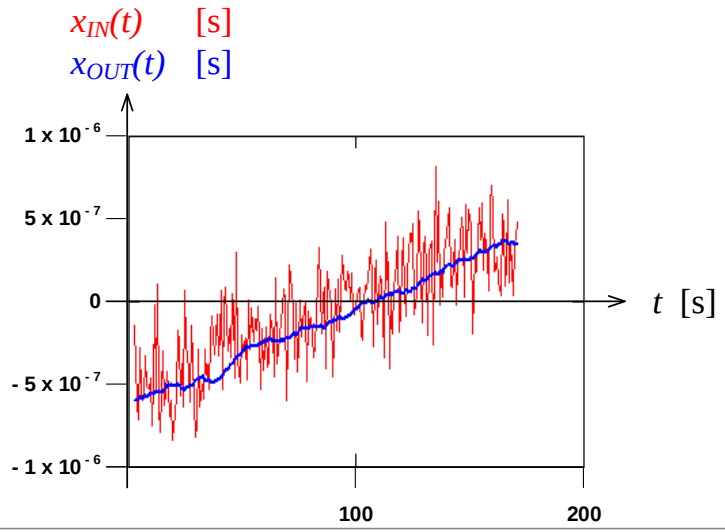

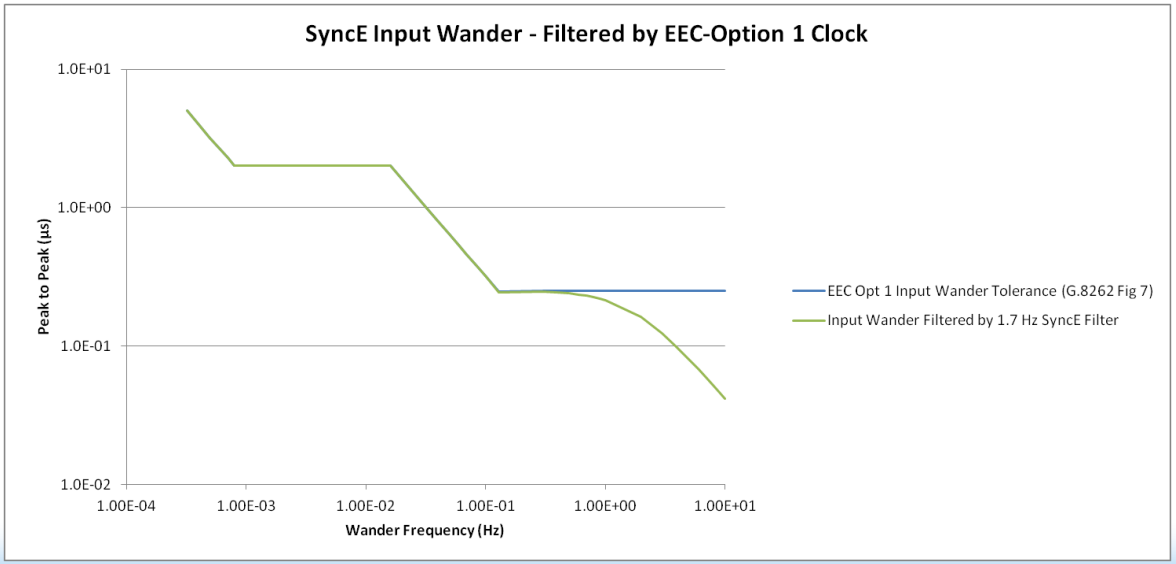

© Copyright 2016, IDT Inc.

3. PLL with 2 Inputs

© Copyright 2016, IDT Inc.

Imagine the following:

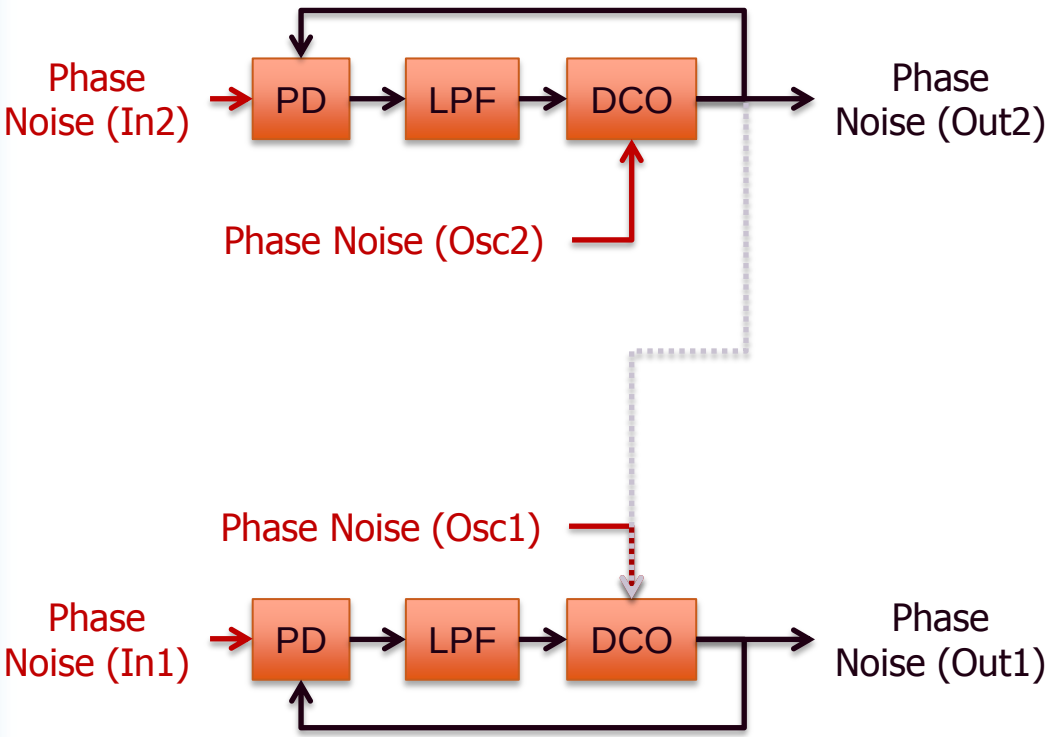

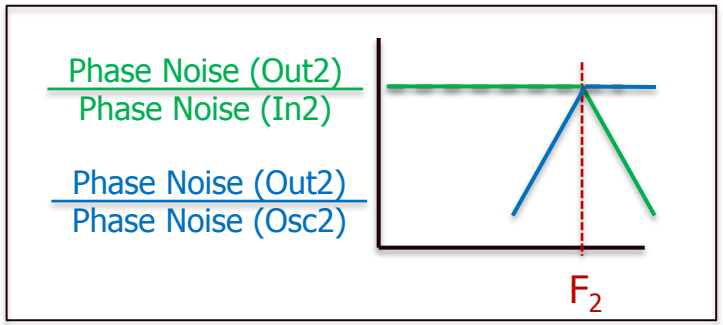

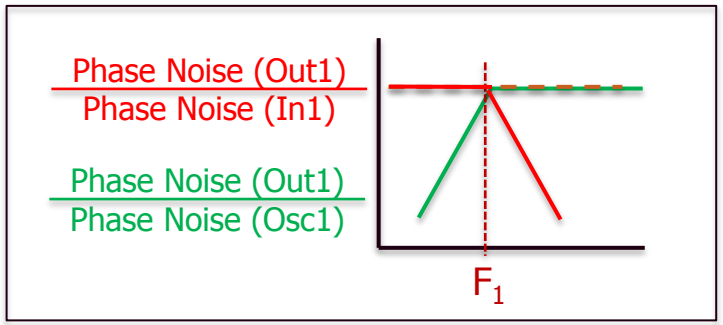

© Copyright 2016, IDT Inc.

What do the transfer functions look like?

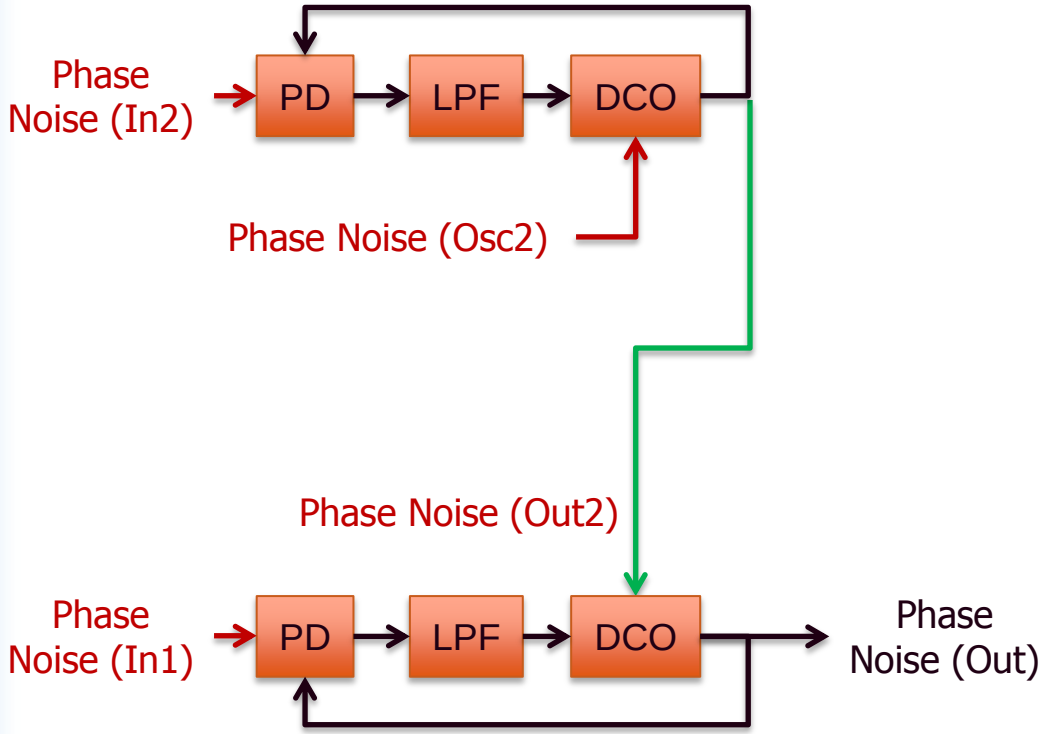

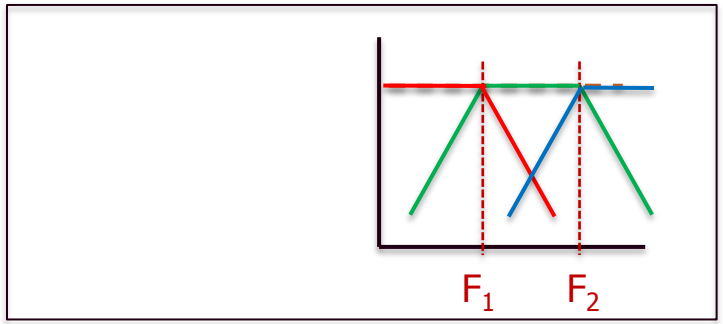

© Copyright 2016, IDT Inc.

Imagine three spectral densities (phase-time):

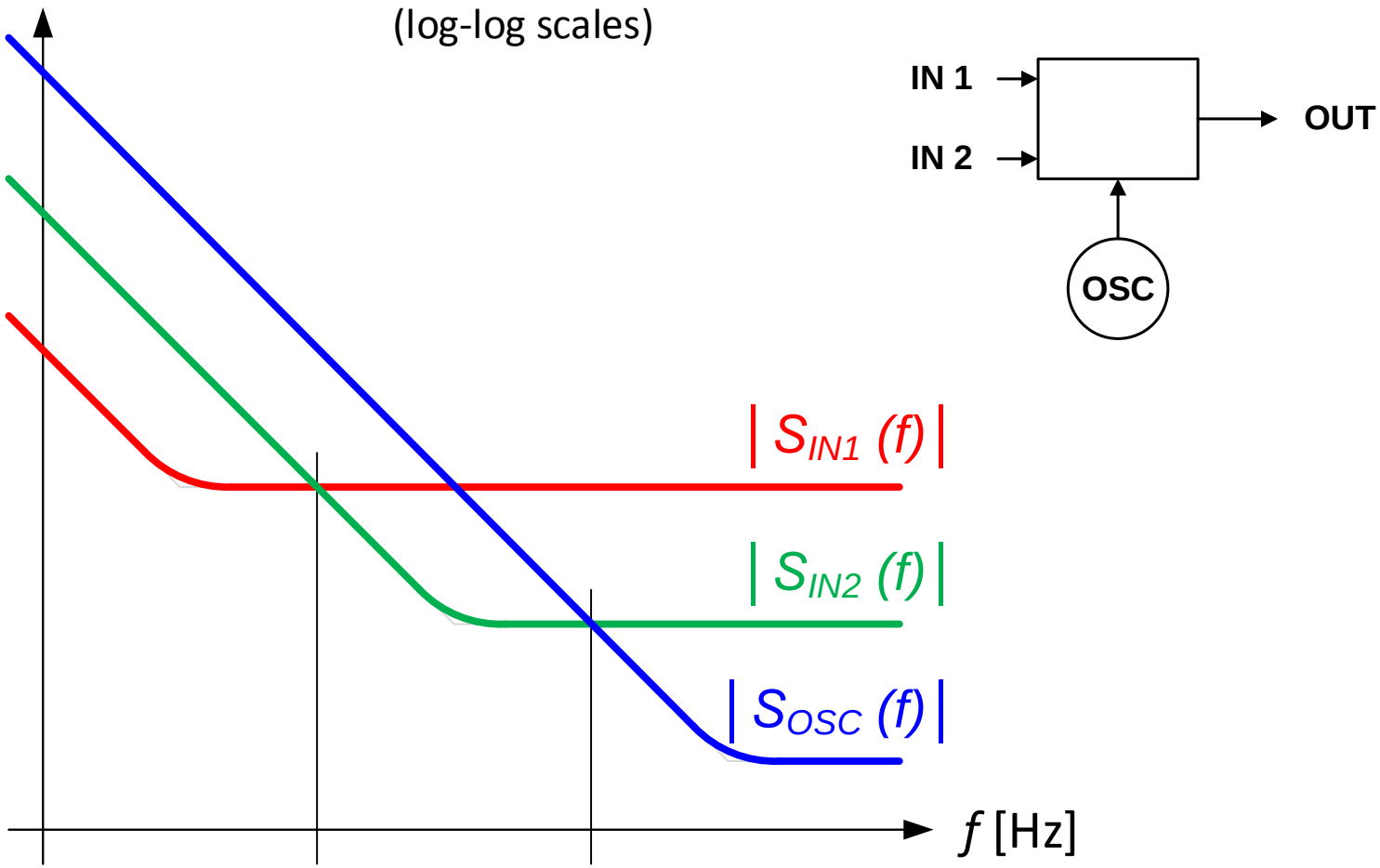

© Copyright 2016, IDT Inc.

… combined by the 2 input PLL:

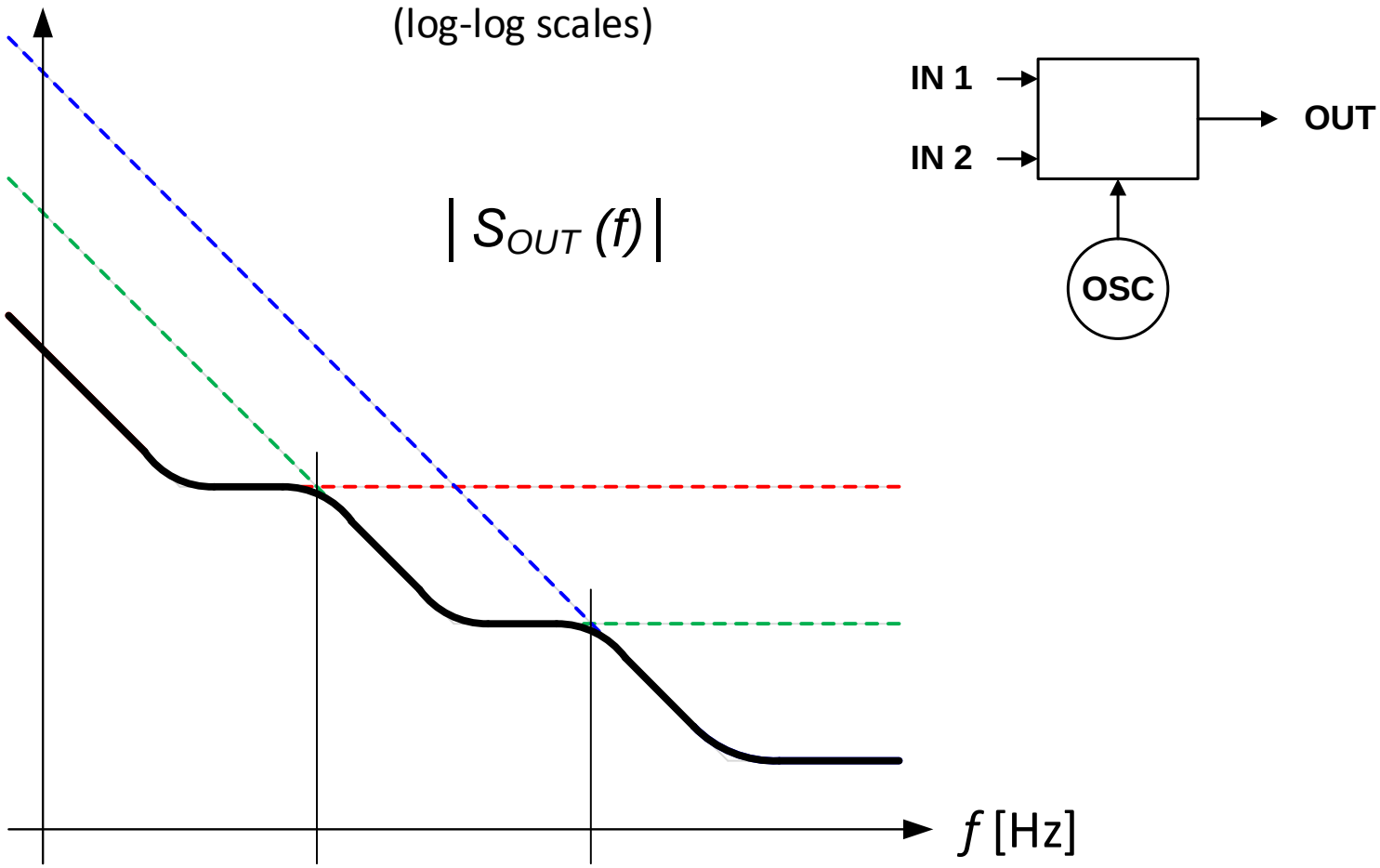

© Copyright 2016, IDT Inc.

Physical Layer Support for Telecom Boundary Clock

G.8273.2 calls for Telecom Boundary Clock (T-BC) to use the physical layer as the basis for the PTP clock frequency

G.8273.2

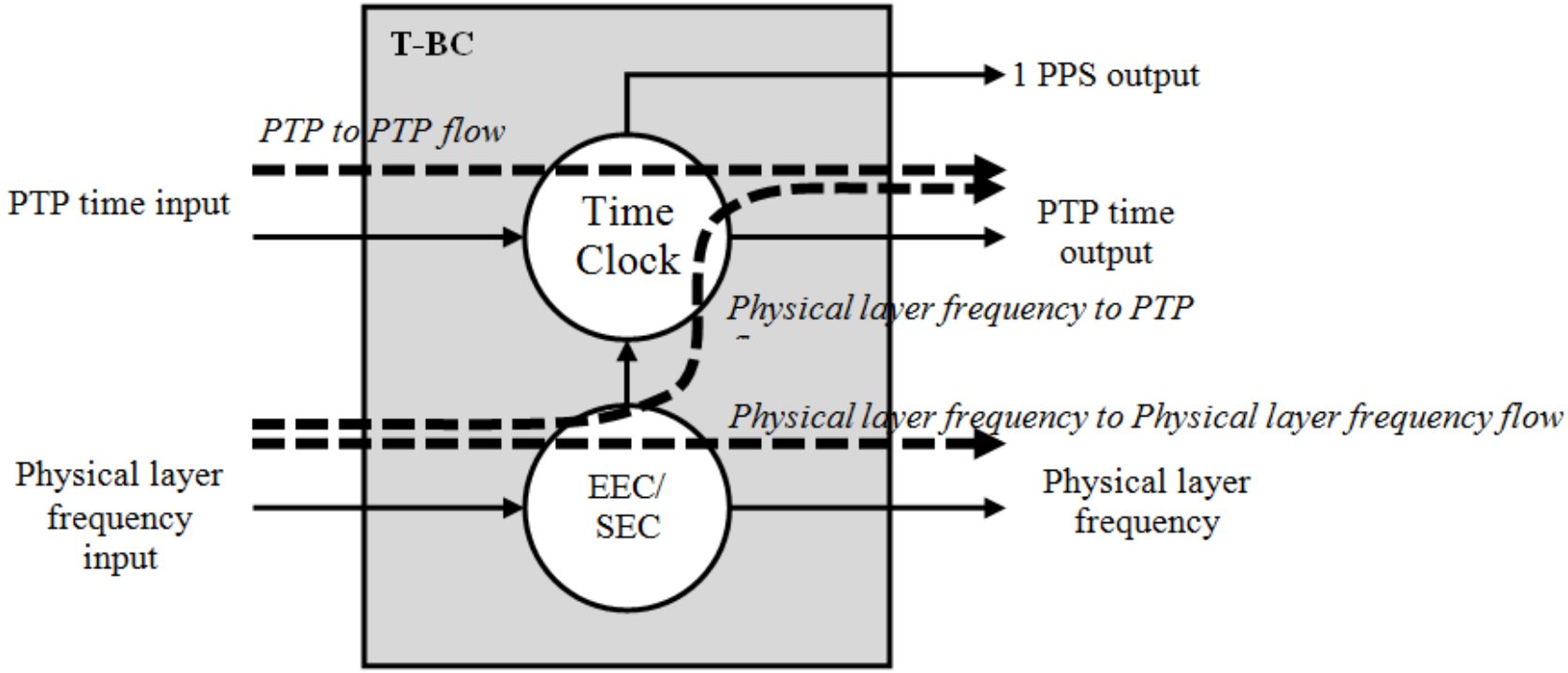

Figure III.5: Signal Flows through a T-BC

© Copyright 2016, IDT Inc.

SyncE + IEEE 1588 Filtering in Combination

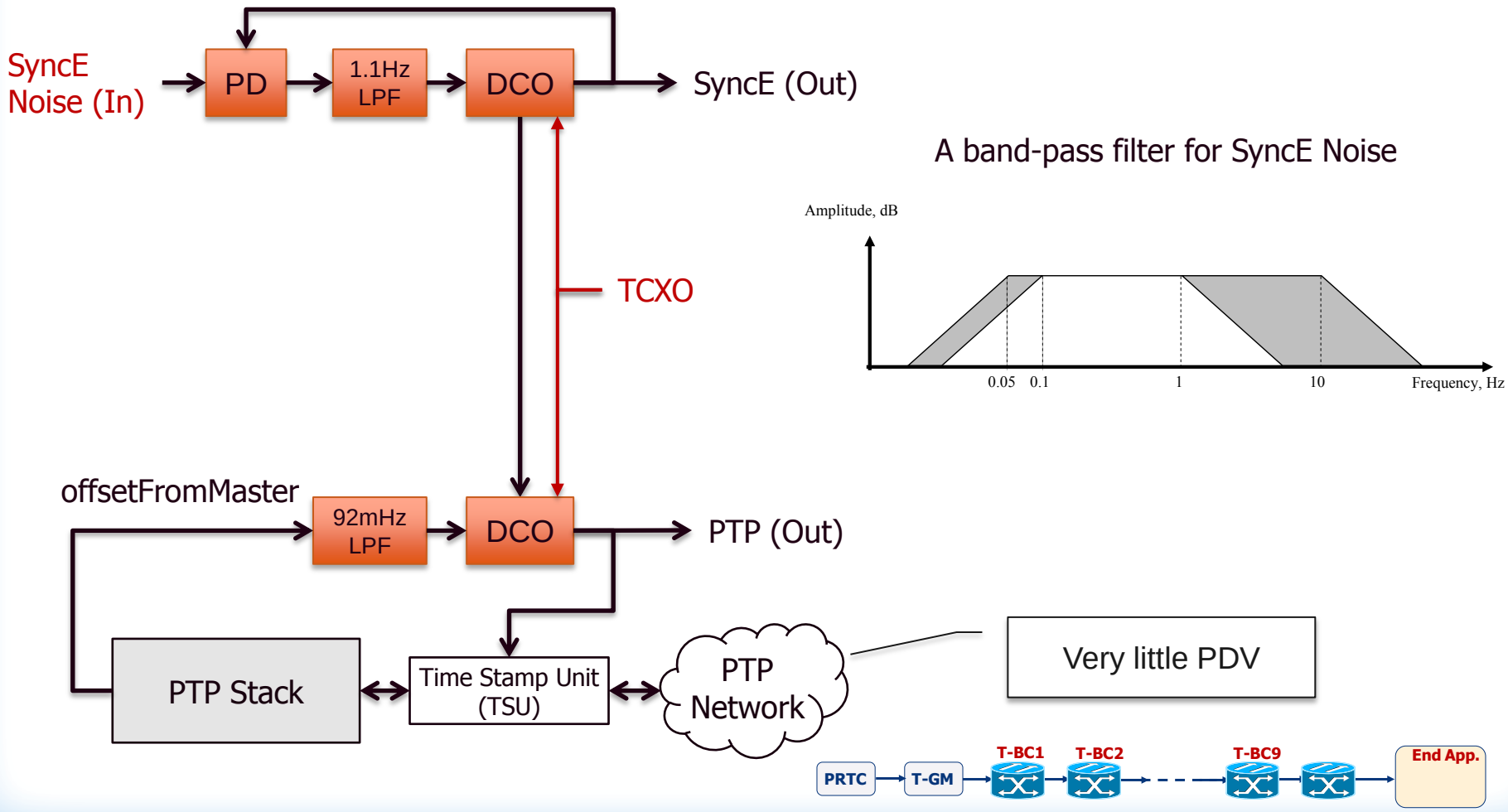

© Copyright 2016, IDT Inc.

Response to Oscillator Drift (Noise)

Oscillator drift on this axis

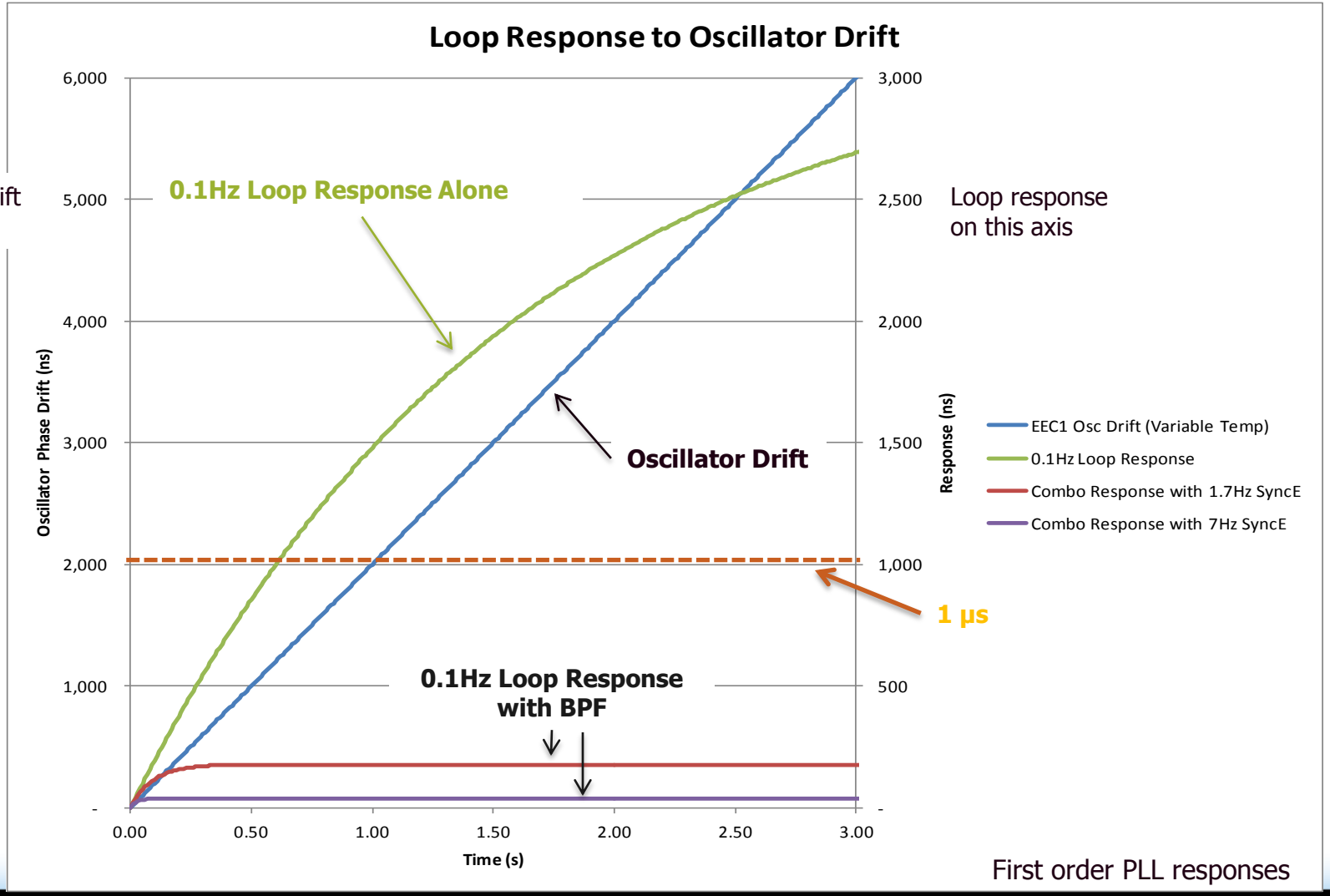

Loop response on this axis

First order PLL responses

© Copyright 2016, IDT Inc.

Thank You

Analog Mixed Signal Product Leadership in Growth Markets

© Copyright 2016, IDT Inc.